October 2024

Flange Bracing Considerations with Framed Openings

The location of framed openings, particularly larger openings such as overhead doors, vertical lift doors, and roll up doors, can be very impactful with regards to the weight and cost of a building.

At a typical frame column, CBC will consider two types of local bracing. Firstly, the outside flange of the column is supported by each girt location. Secondly, the inner flange of the column is supported by a piece of light gage angle that connects diagonally to the adjacent girt (see below). These support options add strength to the column with very little weight added. Without relying on these support solutions, column flange sizes must be increased, which can quickly add considerable cost to the building.

Minimum Flange Brace Angle

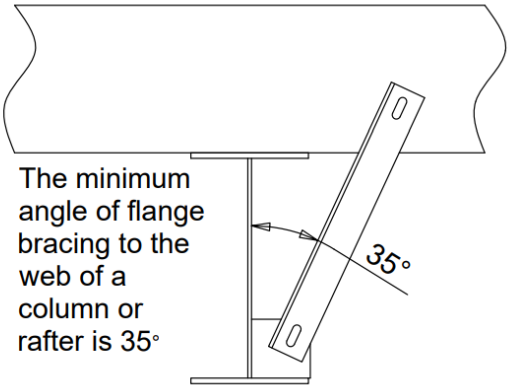

For the frame to be considered braced by the girt, there must be a total of 5’-0” of panel on either side of the column. Some examples of this minimum are shown below.

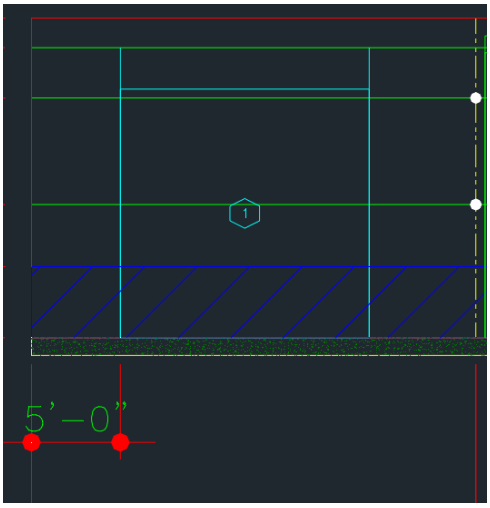

Door is located a minimum of 5’-0” from the steel line.

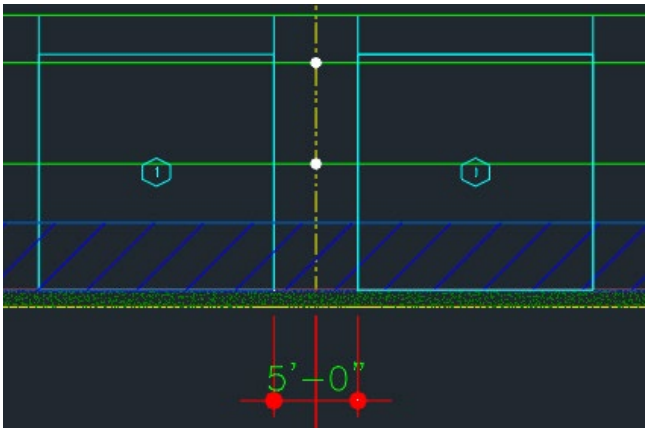

Door jambs have a minimum of 5'-0" spacing from jamb to jamb.

To use flange bracing, there must be at least a 35-degree angle from the center line of the inside flange to the girt on one side of the column. The amount of space required for this depends on the depth of the column, but 3'-6" is a good rule of thumb.

As an example of potential weight impacts, we will consider a 60' x 100' gable building with a 24' eave height:

With 25' bay spacing and assuming each frame is a rigid frame, there is nearly 5500 pounds of weight savings between a building that uses local bracing and a building that does not.

This could equate to thousands of dollars of cost savings on a project by thoughtfully considering the placement of doors.